ASM-1KCBV

●For Crash Tests ●9807 m/s²

Semiconductor Acceleration Transducer for Crash Test

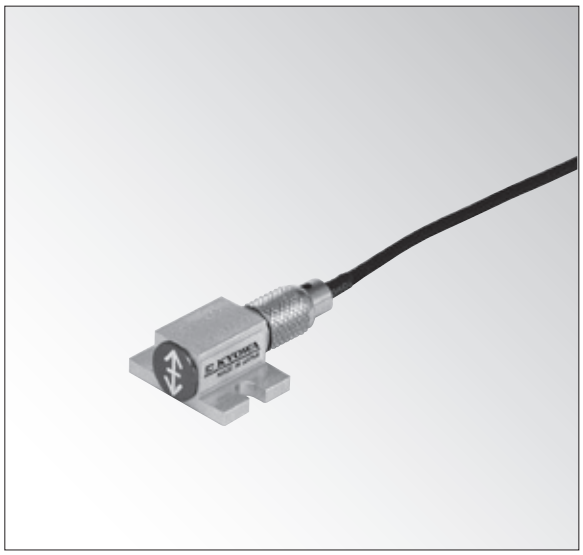

For crash tests with a replaceable cable

- ●Minimal influence to vibration mode of measuring objects because of compact and lightweight design.
- ●Safe overload rating 120%
- ●No damping oil resulting in no temperature effects on frequency response and phase characteristics.
- ●Undamped design ensures minimal phase shift.
- ●Connector-equipped design facilitates cable exchange.
- ●Mount for triaxial measurement is optionally available.

These acceleration transducers adopt a semiconductor strain gage for the sensing element. The compact and lightweight design gives minimal influence to the vibration mode of a measuring object, thereby making them applicable to acceleration/vibration measurement in automotive crash tests and many other fields.

To Ensure Safe Usage

- ●Excitation voltage should be 2 VDC.
- ●Use screws for mounting. Mounting using an adhesive may result in a shock when removing, and this may lead to damage.
- ●When affixing the object to be measured, use the following screws.
  Metric course thread M2.5, M2.6, or unified screw thread No.2-56UNC
- ●When mounting with screws, slightly apply silicone oil or grease to the contact surface. Resultant closer contact will ensure better fixing condition.

Specifications

Performance

Rated Capacity	±9807 m/s² (±1000 G)
Nonlinearity	Within ±1% RO (Within ±0.5% RO optional)
Hysteresis	Within ±1% RO
Rated Output	1.5 mV/V or more
Peak-to-Peak Sensitivity Error	1.5% RO or less

Environmental Characteristics

Safe Temperature	-20 to 60°C
Compensated Temperature	5 to 40°C
Temperature Effect on Zero	Within ±2% RO/°C
Temperature Effect on Output	-0.25 to 0%/°C

Electrical Characteristics

Safe Excitation	2 VDC only
Recommended Excitation	2 VDC only
Input Resistance	120 Ω ±20%
Output Resistance	120 Ω ±20%
Cable	4-conductor (0.035 mm²) shielded cable, 1.7 mm diameter by 7 m long, terminated with connector plugs at both ends (R05-PB5M to amplifier side) (Shield wire is not connected to the case.)

Mechanical Properties

Safe Overloads	120%
Frequency Response	DC to 3.5 kHz at 23°C (Sensitivity deviation ±5%)
Resonance Frequency	30 kHz ±20%
Transverse Sensitivity	3% RO or less
Weight	Approx. 4.3 g (Including)

Optional Accessories

Triaxial mount S (MA-10A) for mounting with adhesive
Triaxial mount T (MA-10B) for mounting with screws
Conversion Cable TT-18 (1 m) (R05-PB5M→NDIS)

Dimensions

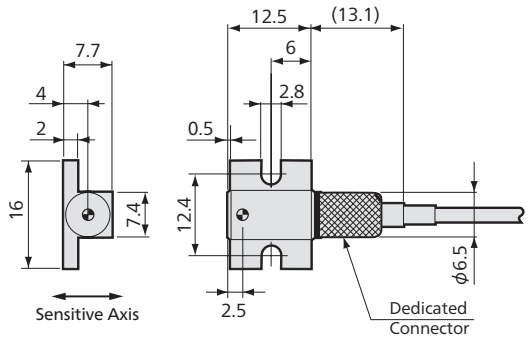

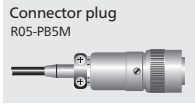

Center of mass

It requires change of the conversion cable or plug.